PS NUMBER :	ALL DIMENSIONS ARE IN MM UNLESS OTHERWISE STATED

LGB EDGE BOX ENCLOSURE

WIRING DIAGRAM

DRAWING NO. :ACD-14723-C-4001

CLIENT : LGB

WO. NO. : 14723

All Pages Reviewed &

Approved By :

No of Sheets : 08

REV : 00

DOCUMENT NO :
ACD-14723-C-4001

NO.	DATE	REVISION	NO.	DATE	REVISION
02			03		
00	20/05/2025	ORIGNAL ISSUE	01		

MELSS

TITLE	SHEET NO	01 / 08
FRONT PAGE	SCALE	NTS

DWN BY	CHD BY	APD BY	DWG.NO.	REV
MM	ARU	ASD RAO	ACD-14723-02-00-01	00

DRAWING PATH:D:\12009\4000 - 4999 Electrical\02.Drawings\LGB\R0\Wiring Drawings\1.FRONT PAGE.dwg

PS NUMBER :	ALL DIMENSIONS ARE IN MM UNLESS OTHERWISE STATED

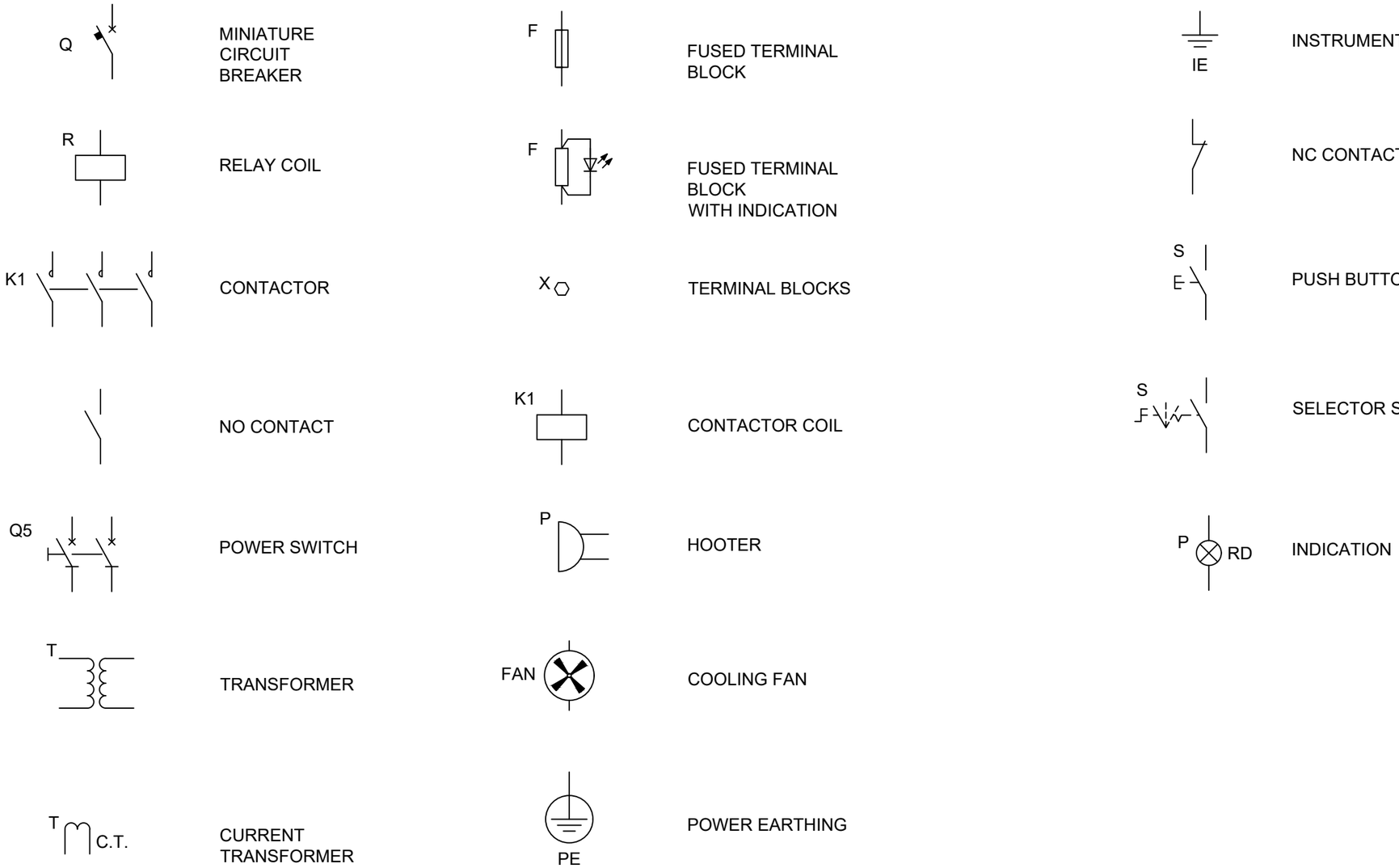

NO.	DATE	REVISION	NO.	DATE	REVISION
02			03		
00	20/05/2025	ORIGNAL ISSUE	01		

DRAWING PATH:D:\12009\4000 - 4999 Electrical\02.Drawings\LGB\R0\Wiring Drawings\2.LEGEND.dwg

MELSS

TITLE	SHEET NO	02 / 08
LEGEND DETAILS	SCALE	NTS

DWN BY	CHD BY	APD BY	DWG.NO.	REV
MM	ARU	ASD RAO	ACD-14723-02-00-01	00

DOCUMENT NO : ACD-14723-C-4001

PS NUMBER :	ALL DIMENSIONS ARE IN MM UNLESS OTHERWISE STATED

Table1. RECOMMENDED WIRE COLOR AND SIZE - SINGLE PHASE & DC SYSTEM

TYPE	SERVICE	CABLE COLOR	CABLE SIZE
415VAC	PHASE -1	RED	As per Table.2
	PHASE -2	YELLOW	As per Table.2
	PHASE -3	BLUE	As per Table.2
	NEUTRAL	BLACK	As per Table.2
220VAC POWER WIRING	PHASE	BROWN	As per Table.2
	NEUTRAL	BLUE	As per Table.2
220VAC CONTROL WIRING	PHASE	BROWN	1.5 Sq.mm
	NEUTRAL	BLUE	1.5 Sq.mm
EARTH	POWER EARTH	YELLOW/GREEN	2.5 Sq.mm
	INSTRUMENT EARTH	GREEN	1 Sq.mm
24V DC - POSITIVE	UP TO TB BUS	BLUE	As per Table.2
	FROM TB BUS	BLUE	1.0 Sq.mm
24V DC - NEGATIVE	UP TO TB BUS	WHITE	As per Table.2
	FROM TB BUS	WHITE	1.0 Sq.mm
DIGITAL INPUT SIGNAL	VOLTAGE	BLUE	0.5 Sq.mm
	SIGNAL	YELLOW	0.5 Sq.mm
DIGITAL OUTPUT SIGNAL	SIGNAL	BLUE	0.5 Sq.mm
	RETURN SIGNAL	WHITE	0.5 Sq.mm
	POTENTIAL FREE CONTACTS	GREY/BLUE/RED	1.0 Sq.mm
ANALOG INPUT SIGNAL	VOLTAGE	BLUE	0.5 Sq.mm
	SIGNAL	RED	0.5 Sq.mm
	RETURN	WHITE	0.5 Sq.mm
ANALOG OUTPUT SIGNAL	OUTPUT SIGNAL	RED	0.5 Sq.mm
	RETURN	WHITE	0.5 Sq.mm

COMPONENT TAG NAME WITH LOCATION

+P X-XX.XX

- COMPONENT SERIAL NUMBER
- COMPONENT TAG NAME
- PANEL NUMBER
  1 - PLC CONTROL PANEL
- P - PANEL
  F - FIELD

CROSS REFERNCE:

SAME DRAWING:

XX → LOCATION CODE

BETWEEN DRAWINGS:

XX . XX

- LOCATION CODE
- SHEET NUMBER

CABLE NUMBERING:

XX1 : XX

- TO COMPONENT PIN NUMBER
- TO COMPONENT TAG NAME

Table-2 (Wire Size based on Maximum Current Rating)

RATINGS	CABLE SIZE
UP TO 10A	2.5 Sq.mm
11A TO 20A	4.0 Sq.mm
21A TO 30A	6.0 Sq.mm
31A TO 40A	10 Sq.mm

DRAWING REFERENCES

COMPONENT DATA:

i → +LOCATION -TAG NUMBER
ii → DESCRIPTION
iii → RATING

Example: +P1-Q01
MCB
2A

DOCUMENT NO : ACD-14723-C-4001

NO.	DATE	REVISION	NO.	DATE	REVISION
02			03		
00	20/05/2025	ORIGNAL ISSUE	01		

MELSS

TITLE	SHEET NO	03 / 08
WIRE COLOR	SCALE	NTS

DWN BY	CHD BY	APD BY	DWG.NO.	REV
MM	ARU	ASD RAO	ACD-14723-02-00-01	00

DRAWING PATH:D:\12009\4000 - 4999 Electrical\02.Drawings\LGB\R0\Wiring Drawings\3.WIRE COLOR.dwg

PS NUMBER :

ALL DIMENSIONS ARE IN MM UNLESS OTHERWISE STATED

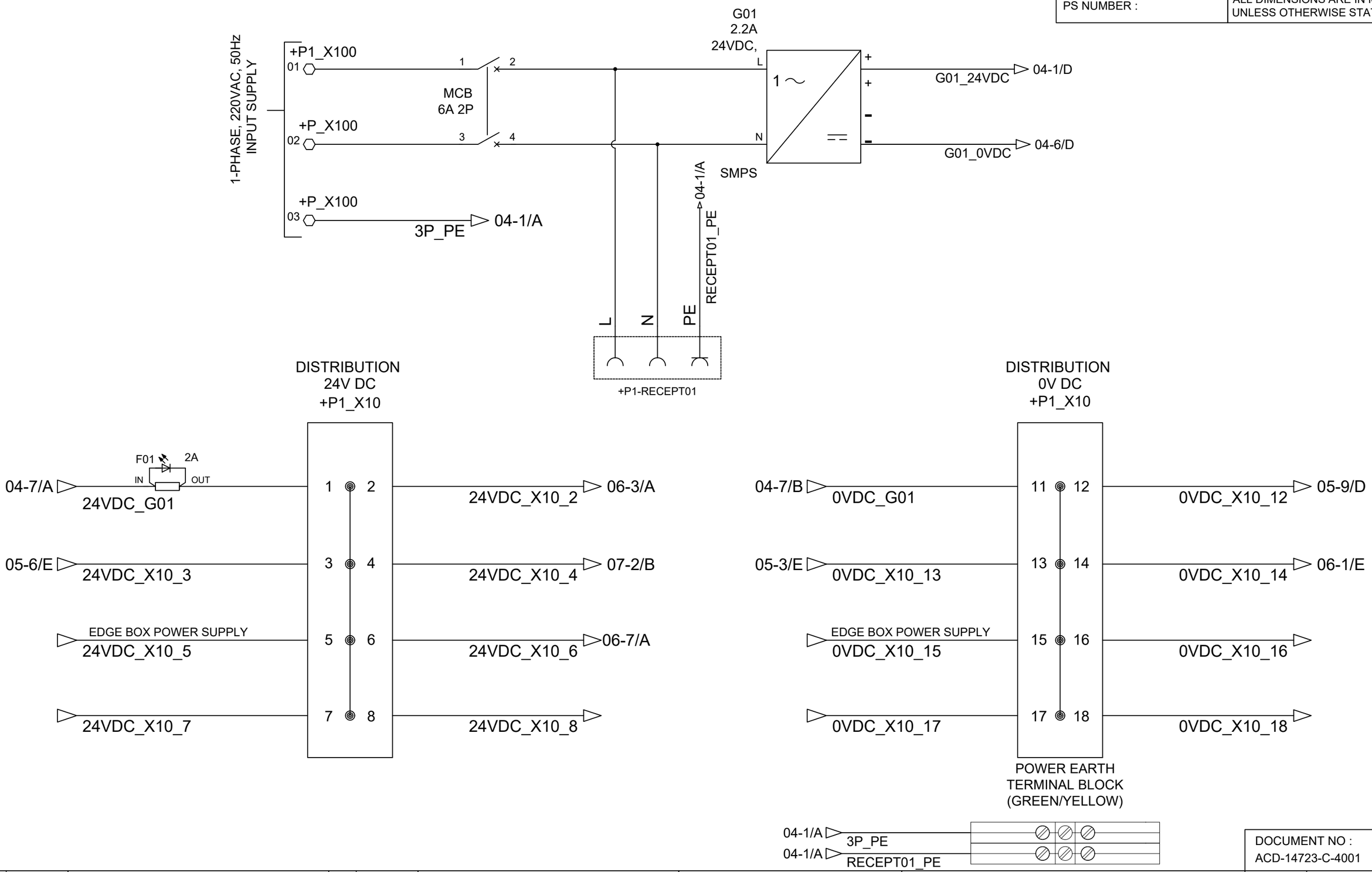

DOCUMENT NO : ACD-14723-C-4001

NO.	DATE	REVISION	NO.	DATE	REVISION
02			03		
00	20/05/2025	ORIGNAL ISSUE	01		

MELSS

TITLE: SMPS & 24V & 0V DC DISTRIBUTION WIRING

SHEET NO: 04 / 08

SCALE: NTS

DWN BY	CHD BY	APD BY	DWG.NO.	REV
MM	ARU	ASD RAO	ACD-14723-02-00-01	00

DRAWING PATH:D:\12009\4000 - 4999 Electrical\02.Drawings\LGB\R0\Wiring Drawings\4.SMPS & 24V & 0V DC DISTRIBUTION WIRING.dwg

PS NUMBER :	ALL DIMENSIONS ARE IN MM UNLESS OTHERWISE STATED

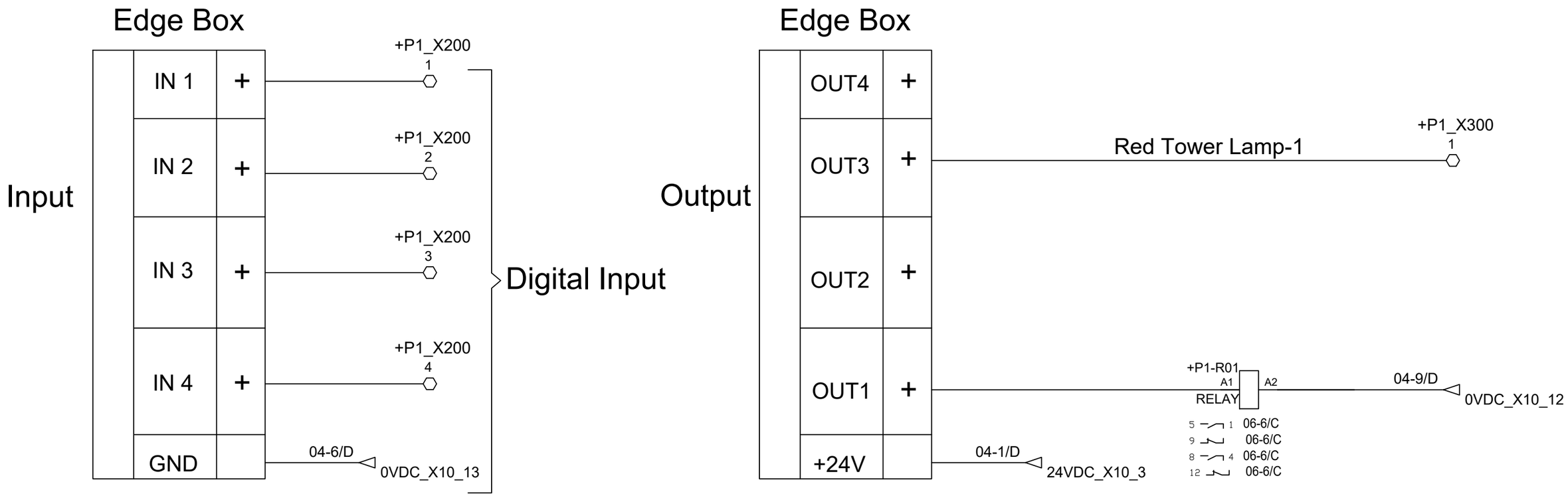

DOCUMENT NO : ACD-14723-C-4001					
02			03		
00	20/05/2025	ORIGNAL ISSUE	01		
NO.	DATE	REVISION	NO.	DATE	REVISION

DRAWING PATH:D:\12009\4000 - 4999 Electrical\02.Drawings\LGB\R0\Wiring Drawings\5.EDGE BOX WIRING.dwg

MELSS

TITLE	SHEET NO	05 / 08
EDGE BOX WIRING	SCALE	NTS

DWN BY	CHD BY	APD BY	DWG.NO.	REV
MM	ARU	ASD RAO	ACD-14723-02-00-01	00

PS NUMBER :

ALL DIMENSIONS ARE IN MM UNLESS OTHERWISE STATED

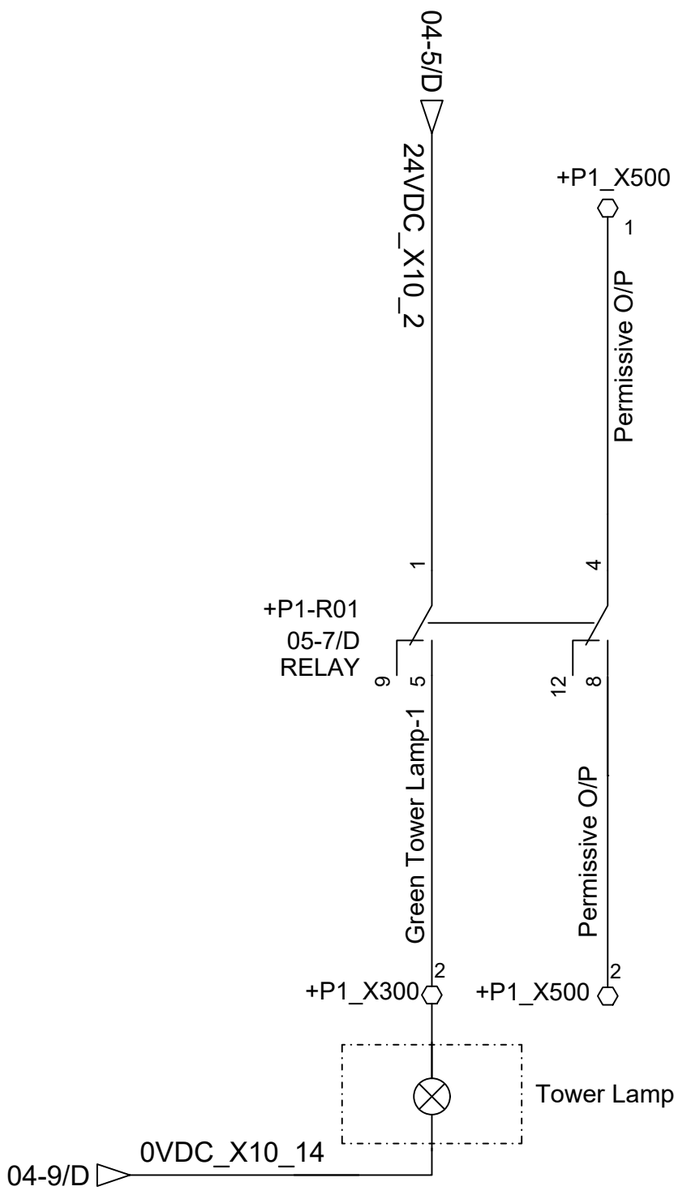

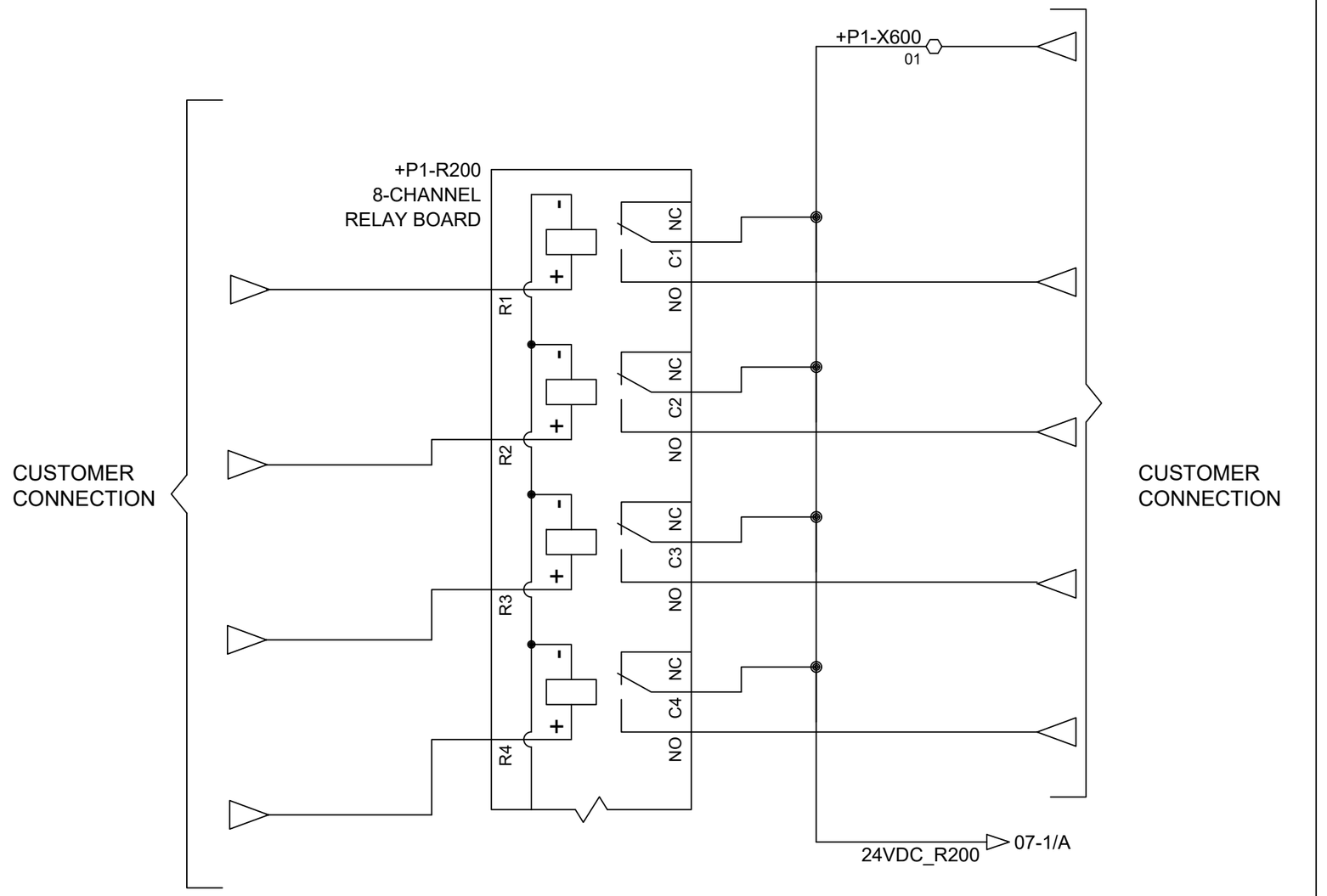

DOCUMENT NO :
ACD-14723-C-4001

NO.	DATE	REVISION	NO.	DATE	REVISION
02			03		
00	20/05/2025	ORIGNAL ISSUE	01		

MELSS

TITLE: RELAY WIRING

SHEET NO: 06 / 08

SCALE: NTS

DWN BY	CHD BY	APD BY	DWG.NO.	REV
MM	ARU	ASD RAO	ACD-14723-02-00-01	00

DRAWING PATH:D:\12009\4000 - 4999 Electrical\02.Drawings\LGB\R0\Wiring Drawings\6.RELAY WIRING.dwg

PS NUMBER :

ALL DIMENSIONS ARE IN MM UNLESS OTHERWISE STATED

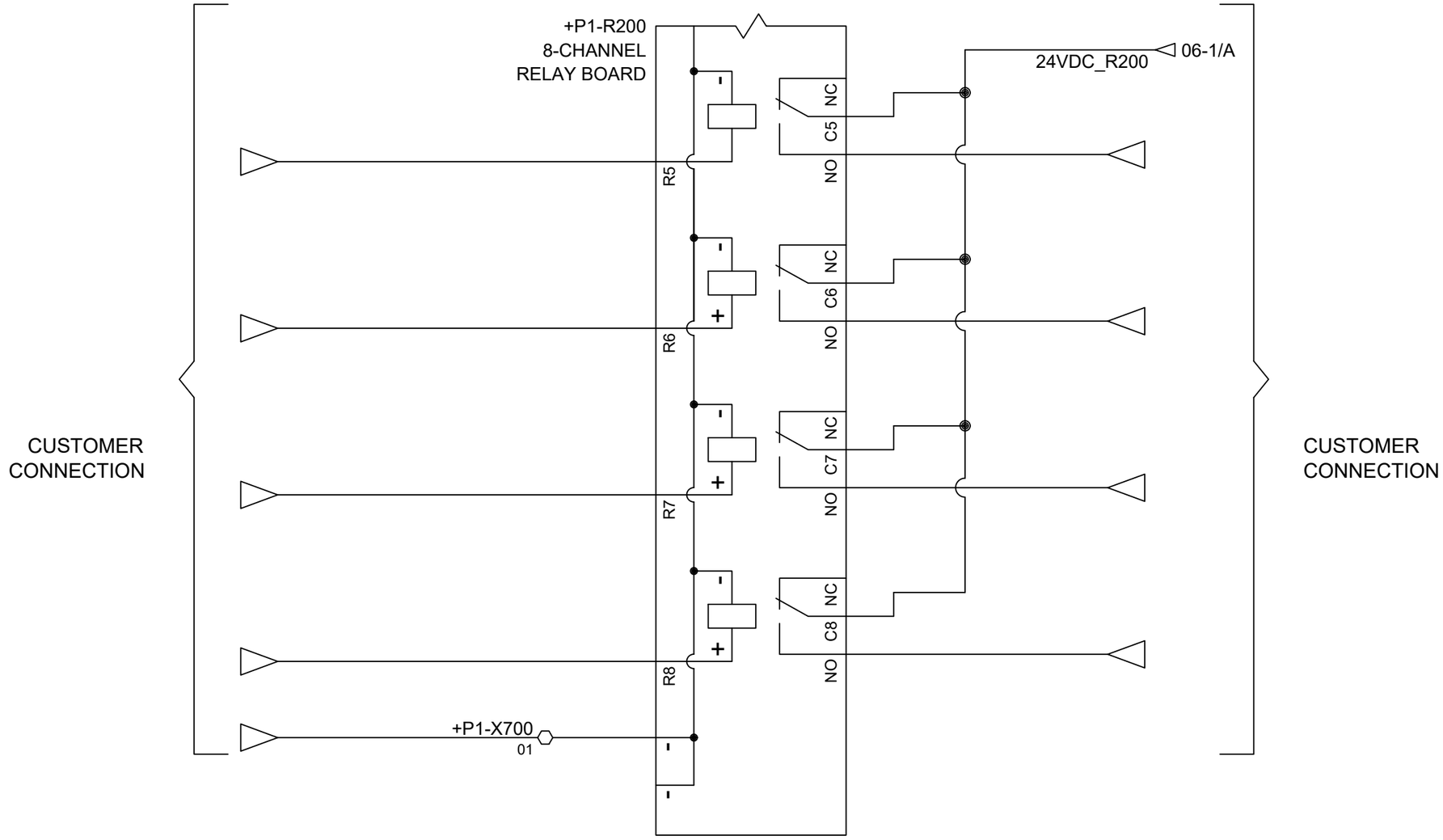

DOCUMENT NO :
ACD-14723-C-4001

NO.	DATE	REVISION	NO.	DATE	REVISION
02			03		
00	20/05/2025	ORIGNAL ISSUE	01		

MELSS

TITLE
8 CHANNEL RELAY WIRING

SHEET NO 07 / 08

SCALE NTS

DWN BY	CHD BY	APD BY	DWG.NO.	REV
MM	ARU	ASD RAO	ACD-14723-02-00-01	00

DRAWING PATH:D:\12009\4000 - 4999 Electrical\02.Drawings\LGB\R0\Wiring Drawings\7.8 Channel RELAY WIRING.dwg

PS NUMBER :	ALL DIMENSIONS ARE IN MM UNLESS OTHERWISE STATED

POWER SUPPLY
FROM POWER SOCKET

DOCUMENT NO :
ACD-14723-C-4001

NO.	DATE	REVISION	NO.	DATE	REVISION
02			03		
00	20/05/2025	ORIGNAL ISSUE	01		

MELSS

TITLE	SHEET NO	08 / 08
tp-link Switch Wiring	SCALE	NTS

DWN BY	CHD BY	APD BY	DWG.NO.	REV
MM	ARU	ASD RAO	ACD-14723-02-00-01	00

DRAWING PATH:D:\12009\4000 - 4999 Electrical\02.Drawings\LGB\R0\Wiring Drawings\8. D Link Switch.dwg